A Nidec Group Company
Nidec Motors & Actuators
All for dreams

Series DCK35
Motor type 405 060

Design Data	
Commutation	Brushed
Direction of rotation	Bi-directional
Bearing type	A:Ball - B:Sleeve

Performance data		
Rated voltage [V]	U_N	24
Nominal torque [Nm]	M_N	6.00
No-load speed [min^{-1}]	n_0	60.0
Nominal power [W]	P_N	35.0
Nominal current [A]	I_N	6.0
Nominal force [kN]	F_N	0.00
Duty cycle		s1

Sensor data	
Pulses	91
Output channels	1

Other data	
Gear ratio	91/1
Gear wheel material	plastic
Suppression components	3,5µ, 1nF
Enclosure class	IP 30
Weight [kg]	0.000

Remarks: d=for thread forming screw M6 DIN ISO 964-2

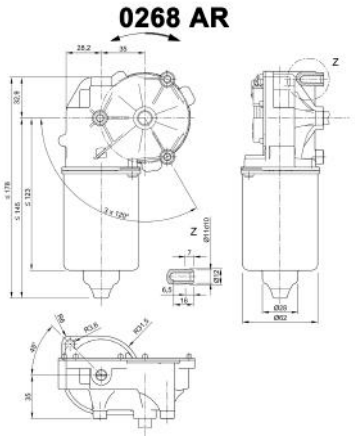

Motor picture

Characteristic curves

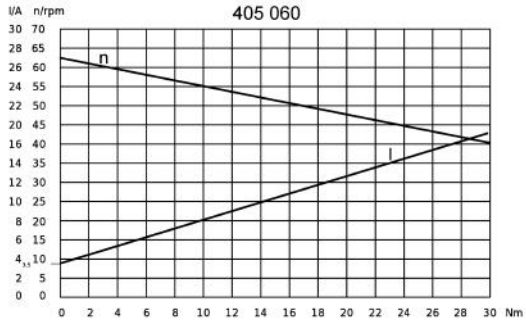

Output shaft drawing (W), Wiring diagrams (S) and Connector layout (K)

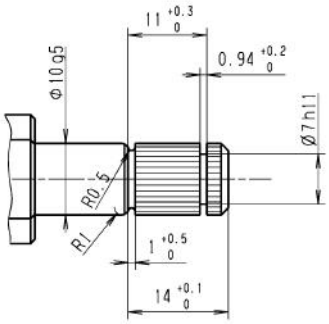

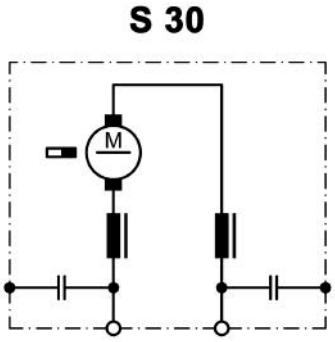

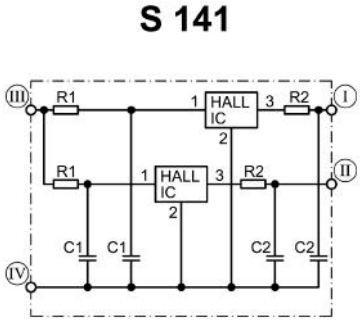

Splines: 8 x 10 (according to DIN 5481)
Output shaft length = 28mm

I Hall-IC A1, terminal 3
II Hall-IC A2, terminal 4
III Hall-IC +, terminal 5
IV Hall-IC -, terminal 6

NIDEC MOTORS & ACTUATORS
Contact: +421 445 547 234
+421 903 390 520
www.opis.sk
opis@opis.sk

Series DCK35
Motor type 405 060

Output shaft drawing (W), Wiring diagrams (S) and Connector layout (K)

K 320

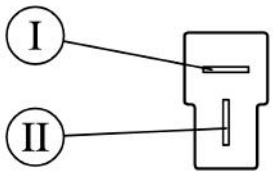

Flat plug (DIN 46244) 6,3x0,8 mating with receptacle housing part#180907, drwg# C-180907& Receptacles for tabs, conductor cross section 0,5-1,5 sqmm (20-18AWG) part# 925603-x, drwg# 925603 www.tycoelectronics.com

K 321

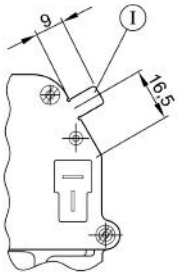

I Ground connection
Blade terminal 6.3 x 0.8 DIN 46 244

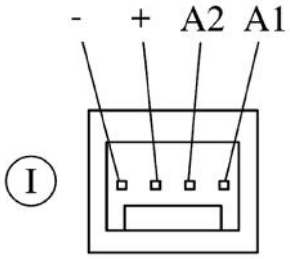

I Mating connector: Panduit CE100 F22-04

Notes

NIDEC MOTORS & ACTUATORS
Contact: +421 445 547 234
+421 903 390 520
www.opis.sk
opis@opis.sk